Processelektronik AB

PE1315 Isolation/amplification Datasheet

Description

Order No.	Va	Vb
PE1315A	12-24V	12-24V
PE1315B	5V	12-24V
PE1315C	12-24V	5V
PE1315D	5V	5V

PE1315 is used to provide a galvanic isolation, division and amplification of pulse trains. These pulse trains are normally given by a pulsegenerator. It is possible to use PE1315 with both complementary and non complementary signals. Note! Set pulse division to 1 if forward/reverse direction must be detected.

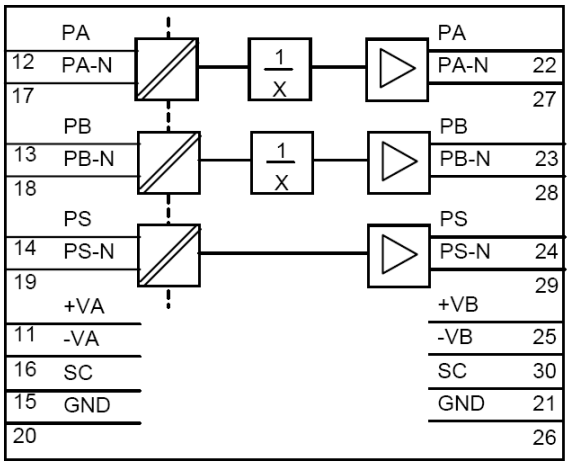

Data

Input

One pulsetransmitter input with three channels A,B and strobe.

frequency		50 kHz
level		
	PE1315A,C	12-24 V
	PE1315B,D	5 V
Impedance at 30kHz		
	compl. Inputs	1.6 kohm
	non compl. Inputs	3.4 kohm

Output

One output with three channels A,B and strobe.

Voltage select (S3-S5 cls)

level	PE1315A,B	12-24 V
	PE1315C,D	5 V
max load		100 mA
Short circuit prot. PTC		50 ohm
Current select (S3-S5 open)		
load		13 mA

Power Supply

Input	PE1315A,C	12-24 V DC
	PE1315B,D	5 V DC
	Power consumption	1 W
Output	PE1315A,B	12-24 V DC
	PE1315CD	5 V DC
	Power consumption	4 W

Environmental Data

Operation temp	5 to 40 °C
Storage temp	-40 to 70 °C

Interference withstand PL3

Non enclosed unit, it will require enclosure or mounting in a cubicle

Strappings

S1 sets the divider for ch A

S2 sets the divider for ch B

S1,S2	1	2	4	8
div=1	Cl	Op	Op	Op
div=2	Op	Cl	Op	Op
div=4	Op	Op	Cl	Op
div=8	Op	Op	Op	Cl

S3,S4,S5 Volt. or, current out close if voltage open if current

Dimensions (in mm)

width x depth x heigth

110 x 112 x 65 mm

DIN-rail mounting.

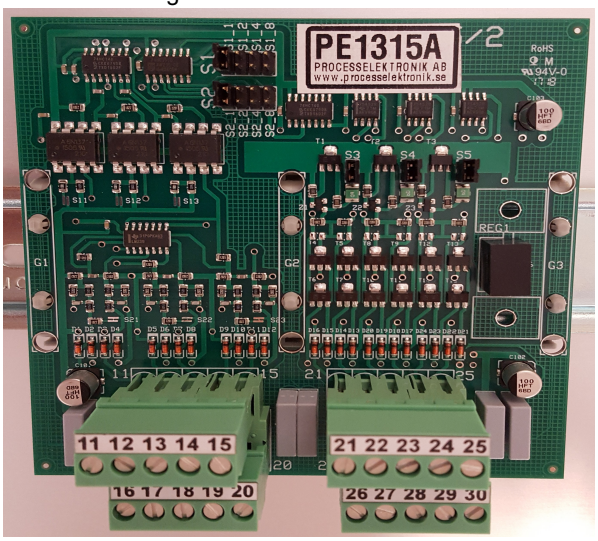

Input load resistors R1-R3 (2,2kOhm). Cut S21-23 bridge if min load is wanted on the pulse transmitter.

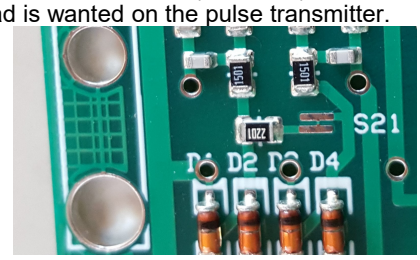

Connections
Complementary inputs and outputsInputs
Inputs
from PG

Outputs
to user

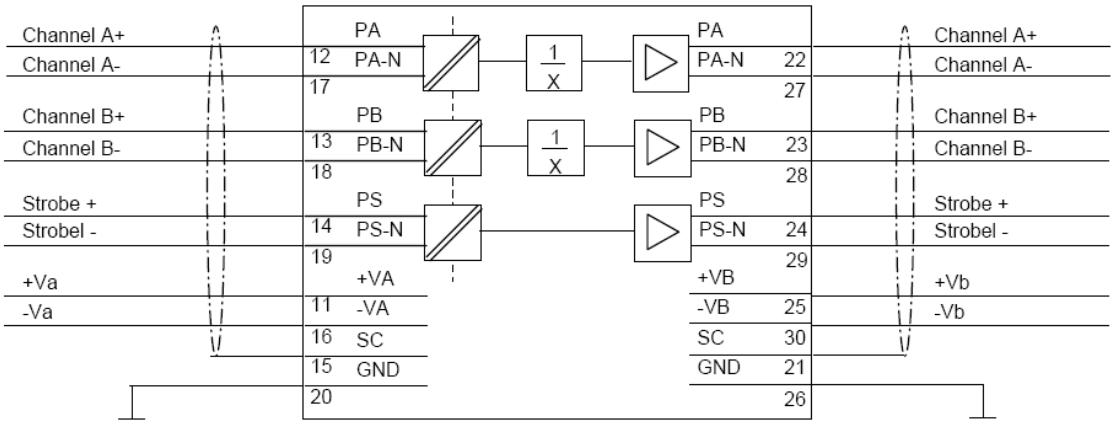

Non Complementary signals

Inputs
from PG
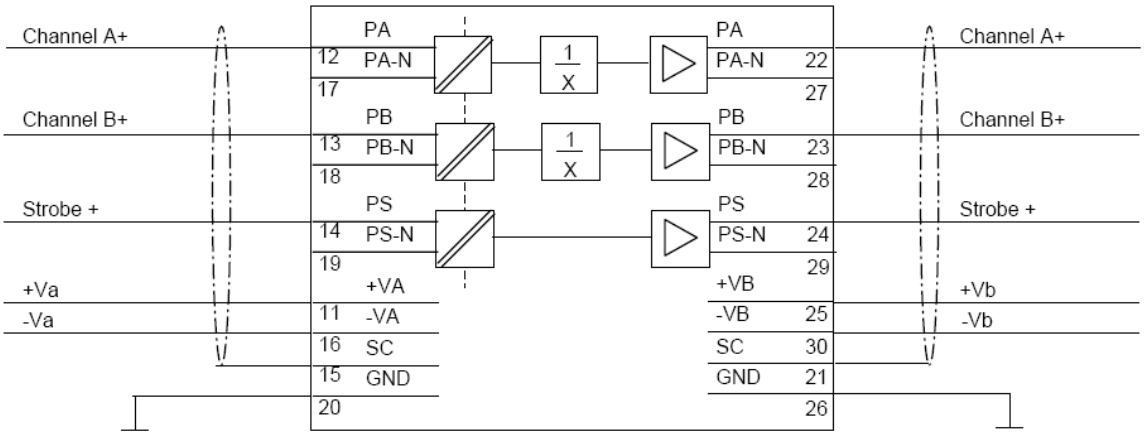
Outputs
to user